Number of Starts :

PRODUCT SPECIFICATION
JERRICAN / PLASTICS / NON REMOVABLE HEAD

5LT 130g 38mm Neck Jerrycan (K1-Style)

PRODUCT

UN Mark : **N/A**

Nominal Capacity (litres): 5,0
Brimful Capacity : 5,4
Total Volume Capacity:

Nominal Tare Weight (g) : 130G +/- 5G
All dimensions/weights are approximate and may vary

Minimum Internal
Test Pressure (kpa) : N/A

Minimum Material Thickness (mm) :				
Sidewall	0,55	**Base**	0,55
Top	0,55	**Corner**	0,45

Body Material : HDPE

B
2009-02-05

Handle : Intergral on top
Method of Fabrication : Extrusion Blow-moulded

NECK TYPE

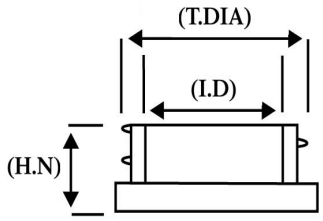

Height (Hn)	Ext. Dia (T-DIA)	Int Dia (ID)
21,3	37,2	32

Neck Thread Formation : Nominal 38mm

Pitch of Thread (mm) : 1
4,25

BODY DIMENSIONS

Nominal (mm)

Overall Height (H) : 282mm

Body Section (L) : 185.9mm
Body Section (B) : 133.6mm

Label Panel width (LP): 130mm
Label Panel Height (LPH): 163mm

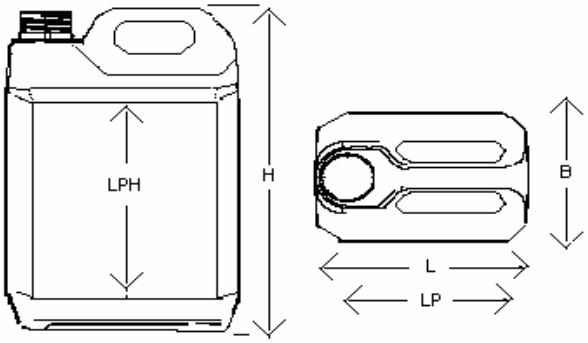

CLOSURE

Closure Type : Screw cap with or without tamper evident band or CRC
Closing Torque : 3.0Nm
Closure Overseal : N/A

Material :

Closure Seal Type :

ADDITIONAL DETAILS

Cap should be closed at ambient temperature to a torque of 3NM

NOTE

This document was released by a secured data file and is valid without signature.
It is the customers responsibility to check chemical and physical compatibility between the drum / container and product filled, also the influence of product filled, filling conditions, storage and transportation on the closing torque of the closure and or accessories.

QD 1010	PP No: **P - 0168**	Issue No : Date :	Approved by: QA Dept